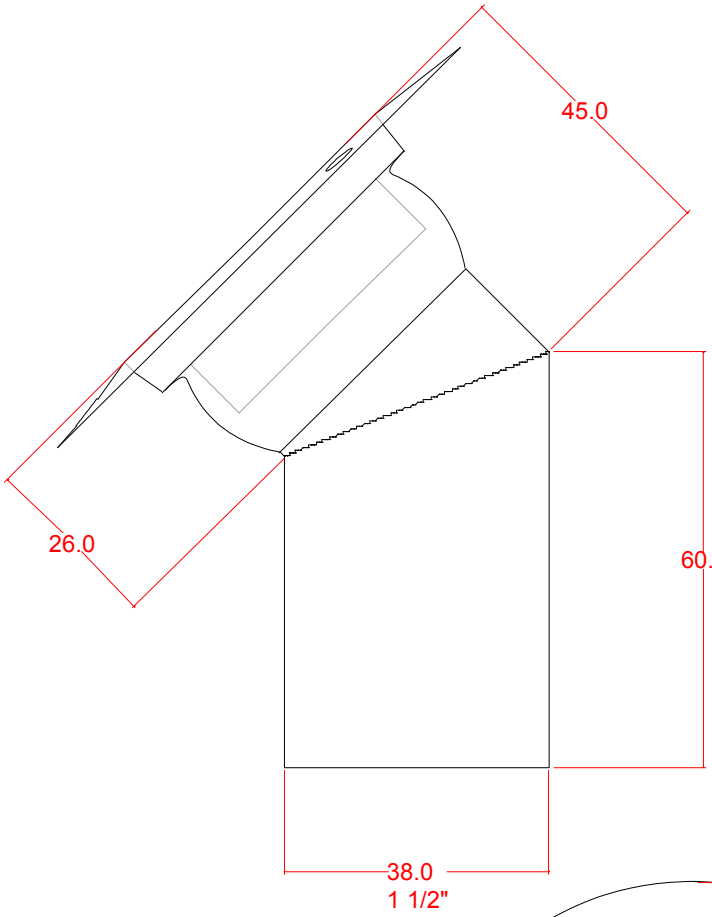


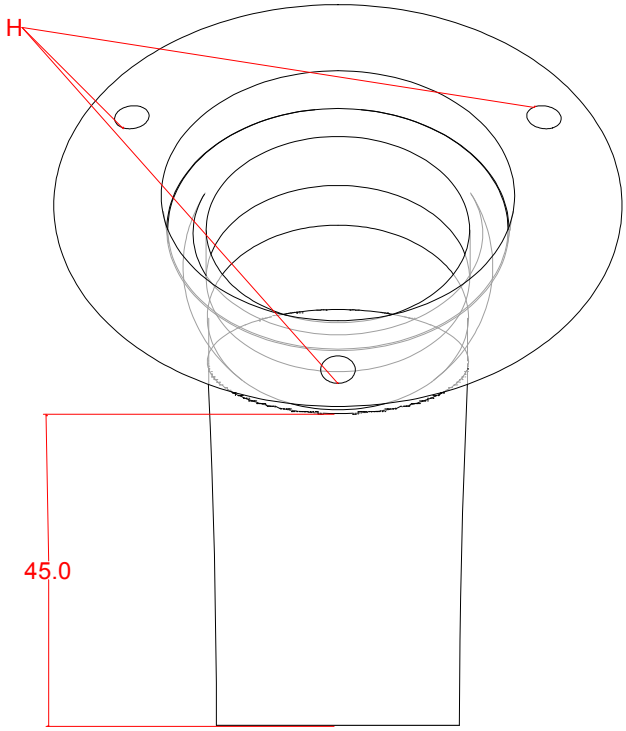


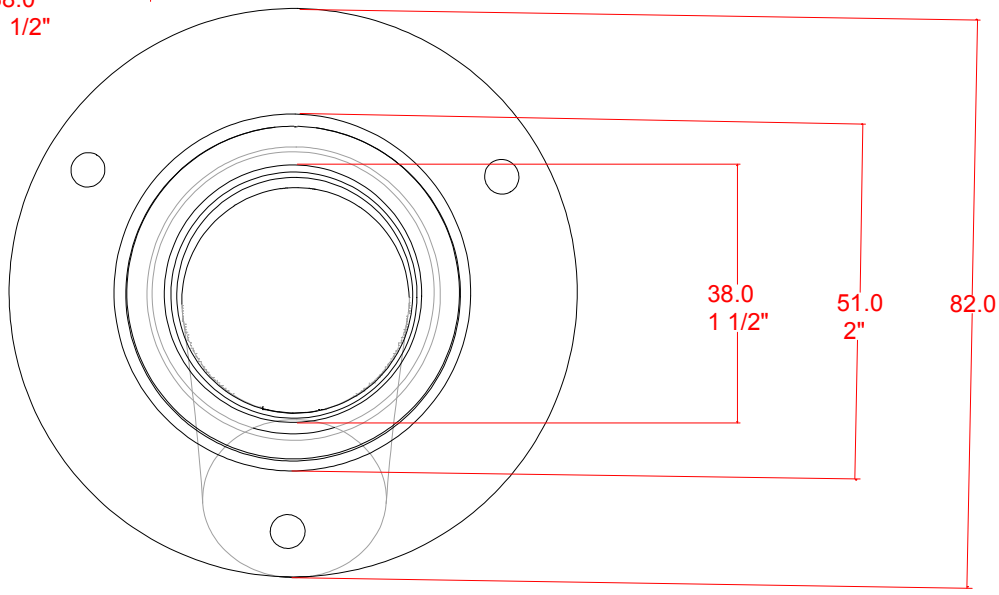

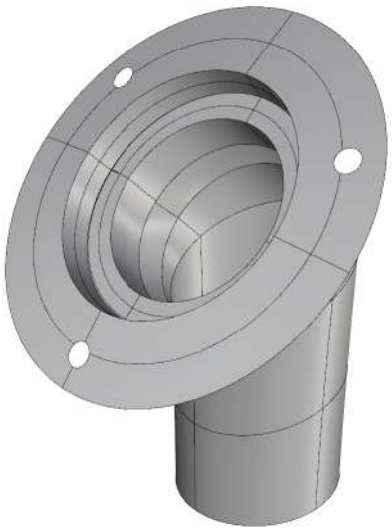
| Product Name: Fuel Flush Deck Filler - Stainless Steel - 38mm - 45 Degree | | |
|---|---|---|
| Firm Name & Address:<br>Jay Wolfe Metalwork Ltd<br>Unit 4<br>Horsley Road<br>Northampton<br>NN2 6LJ | | Notes:<br>H:-<br>PCD: 69.3mm<br>Centres: 60mm<br>Hole Ø: 5mm |
| Date:<br>11/08/2016 | Drawn By:<br>D.J. Abel | Product No:<br>DFFLSSF3845D |